Furnas

Furnas Electric Company
Batavia, Illinois 60510
(708) 879-6000
FAX (708) 879-0867

Furnas Electric Company
Markham, Ontario L3R 1G3
(416) 475-1798
FAX (416) 475-8630

14-GES 9/94

Furnas

ESP100™

REPLACEMENT PARTS

Class 14
Starters & Contactors
Sizes: 0, 1 & 1¾
14CS, 14DS, 14ES

Furnas

Replacement Parts 14-GES

September, 1994
Supersedes Issue of
July, 1993

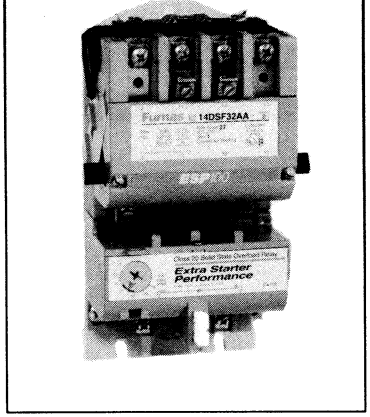

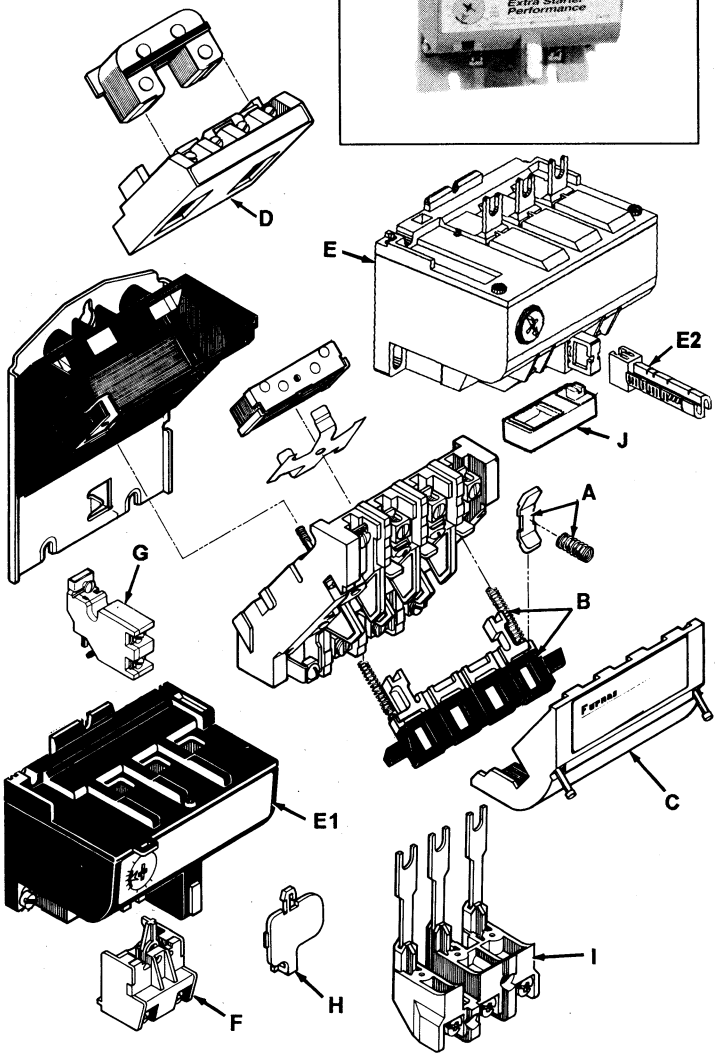

9/94

Starters & Contactors — Class 14

0, 1 & 1 3/4 — 14CS, 14DS, 14ES

Item	Part Description			Part Number
A	Contacts & Spring, One Complete Pole			
	Power Pole	Size	0	75CF14
			1	75DF14
			1¾	75EF14
	Interlock Pole (includes spring retainer)	All Sizes		75AF14
B	Cross Arm (less contacts) With Cross Arm Springs			75P1000
C	Contact Board Cover			D29079001
D	Coil			
	60 Hertz	50 Hertz		
	120V	110V		75D73070F
	110-120V/220-240V	110V/190-220V		75D73070A
	220-240V/440-480V	190-220V/380-440V		75D73070C
	550-600V	550V		75D73070E

(For other voltages specify the number stamped on the coil).

E Overload Relays - 3 Phase

Size	Amps	Class 10	Class 20	Class 30
0, 1	0.25-1	48ASA3M10	48ASA3M20	48ASA3M30
0, 1	0.75-3	48ASB3M10	48ASB3M20	48ASB3M30
0, 1	2.5-10	48ASD3M10	48ASD3M20	48ASD3M30

Overload Relays - Single Phase

0, 1	0.75-3	48ASB1M10	48ASB1M20	48ASB1M30
0, 1	2.5-10	48ASD1M10	48ASD1M20	48ASD1M30
0, 1	5.0-16	48ASE1M10	48ASE1M20	48ASE1M30

E1 Overload Relays - 3 Phase

Size	Amps	Class 10	Class 20	Class 30
0, 1	3-6, 5-10	Old style *(use styles on above table)*		
0, 1	9-18	48ASE3M10	48ASE3M20	48ASE3M30
1, 1¾	13-27	48ASF3M10	48ASF3M20	48ASF3M30
1¾	20-40	48ASG3M10	48ASG3M20	48ASG3M30

E2	Reset Extender		49ASRE
F	Auxiliary Contact Overload Kit-NO Contact		49ASNO
		NC Contact	49ASNC
G	Front Mtg. Auxiliary Interlock SPST-NO		49AAFO
		NC	49AAFC
H	Tamper Resistant Cover	9-40A	49ASTC
I	Lug Extender (Size 0, 1)	9-40A	49ASLE
J	Dust Seal		49ASDS

NOTE: When ordering replacement parts, give catalog number of control and part name and number.